FSQ－85EDX

Extender ED 1.5x System Chart(TX)

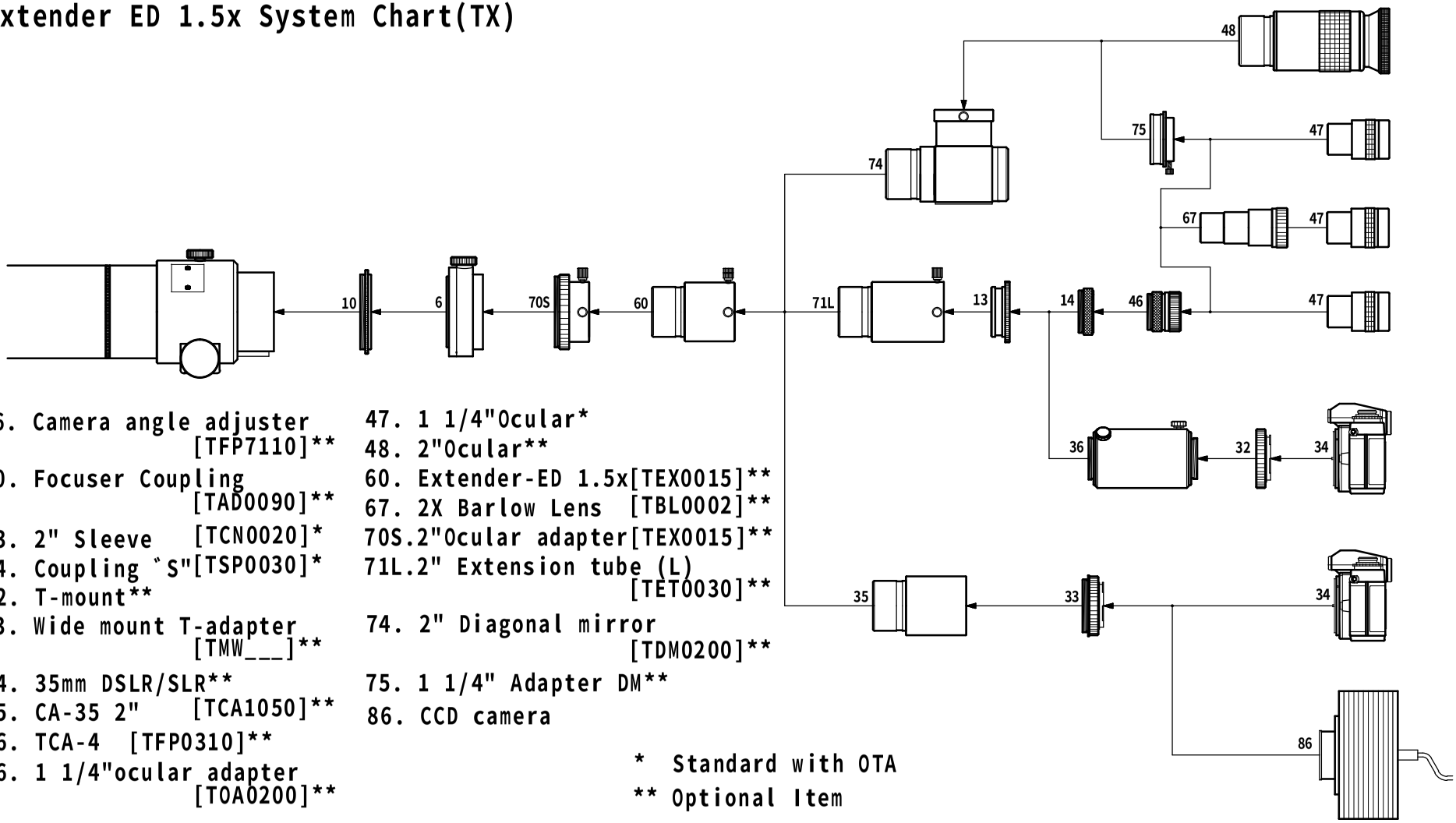

6. Camera angle adjuster [TFP7110]**
10. Focuser Coupling [TAD0090]**
13. 2" Sleeve [TCN0020]*
14. Coupling "S"[TSP0030]*
32. T-mount**
33. Wide mount T-adapter [TMW___]**
34. 35mm DSLR/SLR**
35. CA-35 2" [TCA1050]**
36. TCA-4 [TFP0310]**
46. 1 1/4"ocular adapter [TOA0200]**
47. 1 1/4"Ocular*
48. 2"Ocular**
60. Extender-ED 1.5x[TEX0015]**
67. 2X Barlow Lens [TBL0002]**
70S.2"Ocular adapter[TEX0015]**
71L.2" Extension tube (L) [TET0030]**
74. 2" Diagonal mirror [TDM0200]**
75. 1 1/4" Adapter DM**
86. CCD camera

* Standard with OTA
** Optional Item