AG Optical Systems

Quality, Innovation, Performance

Contact: Dave Tandy
Email: info@agoptical.com
Phone: 256-541-0218
Address: 254 Mayo Road, Huntsville, AL 35760
Website: www.agoptical.com

AG Optical Systems (AGO) specializes in the production of top-quality astrographs for the discerning astrophotographer. We pride ourselves in providing our customers with a product that not only exceeds their demanding performance expectations but is backed by outstanding customer service and a commitment to provide products with exceptional performance at an exceptional value.

AGO designs and builds Imaging Dall Kirkham (iDK) and Newtonian astrograph telescopes. Each telescope crafted by AGO makes use of carbon fiber composites, modern design and construction techniques, and relies upon precision optics to provide diffraction-limited performance. AGO astrographs are capable of capturing beautiful images of the universe or can be used for serious scientific work such as NEO (Near Earth Objects) searches or photometry.

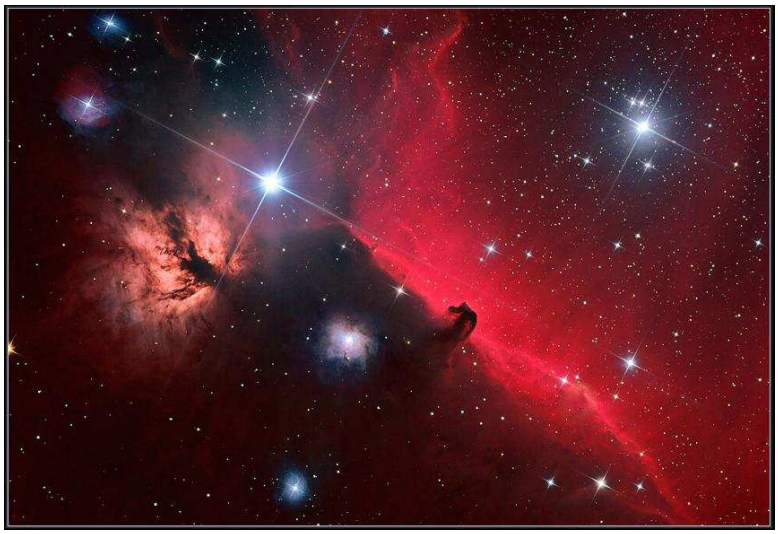

Figure 1 Image by AGO Customer Scott Johnson

2012 Product Line

Astronomy magazine 2012 Star Products

Imaging Dall Kirkham (iDK) Astrograph

AGO Imaging Dall Kirkham (iDK) astrographs are high resolution instruments with excellent on and off axis performance. By combining large aperture, medium focal ratio, corrected optics in a lightweight, stiff, and thermally stable carbon fiber tube AGO has created an instrument capable of capturing stunning images of our universe.

Figure 2 AG Optical Systems 12.5" Imaging Dall Kirkham Astrograph

Product Highlights

- Optics figured and quality tested as a system
- Fast F6.7 system specifically designed and baffled to cover 16803 size chip
- 11” of back focus to support almost any combination of imaging components*
- Excellent coma free, astigmatism free, flat field performance over 60 mm image circle
- Optec TCF-S3i 3” temperature compensating digital focuser included as standard, optional FLI Atlas
- Outstanding field illumination across big chip cameras.
- Solidworks 3D CAD designed carbon fiber truss tube engineered for stability and low thermal expansion
- Carbon fiber composite primary and secondary baffles with flocked interior surfaces

- Multi-point, CNC machined primary mirror flotation cell
- Stainless steel fasteners
- Ultra Low Expansion (ULE) mirrors optional
- 100% Made in the USA with outstanding customer support

*Note: Back focus is measured from back plate to focal plane.

The AGO iDK astrograph line includes a very manageable 12.5" F6.7 model and two observatory class F6.7 models in 17" and 20" apertures. Each model has a Supremax 33 primary mirror and Supremax 33 secondary mirror with enhanced aluminum coatings on both mirrors. These tube assemblies contain optics that are figured and tested as a system to guarantee excellent performance.

Optical Design

AG Optical Dall Kirkham astrographs provide pinpoint stars (sub 6 micron RMS spot size, 60 mm image circle) over large fields of view at a moderate F6.7 focal ratio. This exceptional wide field performance is made possible by the use of a two element corrector which reduces coma, field curvature and astigmatism to negligible levels.

Off-axis Spot (55 mm image circle)

At right is a flat field, polychromatic spot diagram for the AGO iDK17 (imaging Dall Kirkham) telescope. This system provides 17" of aperture at a moderate focal ratio of F6.7 (2720mm focal length). The circles around the spot diagrams represent the size of the Airy disk and clearly illustrate the excellent level of correction achieved by this system.

Corrector Assembly

On-axis Spot

Each AGO iDK corrector is permanently aligned and has multilayer broadband AR coatings (<0.5% reflection) on each optical surface. The corrector provides a 60mm + diameter circle of pinpoint stars easily capable of covering chips as large as those found in 16803 cameras.

Stray light is effectively controlled through the strategic placement of carbon fiber composite baffles at the primary and secondary mirrors. As an added measure, the interior of each baffle is lined with a flocking material that is extremely effective at trapping stray light.
The combination of an excellent optical design, top quality components, and careful assembly ensure that each AGO iDK astrograph will provide outstanding performance where it counts..... at the chip of your CCD camera.

Optical Testing

AGO is committed to delivering telescopes that consistently offer performance second to none. To meet this objective each set of iDK optics is tested as a system in autocollimation. This type of testing is time consuming and expensive but it essentially guarantees that the optics will provide outstanding performance and realize the potential of the excellent design.

Figure 3 Pelican Nebula by Scott Johnson, AGO 12.5" IDK Astrograph

Back Focus

AGO has designed our iDK to be CCD imaging platforms capable of the highest performance. Serious CCD imagers use a wide range of accessories to get that perfect image and finding adequate back focus is always a challenge. With the availability of digital focusers, image rotators, off axis guiders, adaptive optics and various filterwheels back focus is rapidly consumed. Each AGO iDK has approximately 11" of useable back focus (as measured from the back plate to the focal plane) which is sufficient for nearly any image train combination.

A variety of tube extenders and adapters are available to help you dial in the perfect position for your CCD imaging train. Please do not hesitate to contact AGO to discuss your specific needs.

Focuser

AGO has selected the Optec TCF-S3i 3” temperature compensating digital focuser as standard equipment for our iDK astrograph line. This focuser is capable of carrying very heavy camera loads and is extremely precise offering repeatable, predictable automatic focusing. Its digital control system allows automatic focusing of stars and perfectly complements an AGO iDK astrograph. With the Optec TCF-S3i 3” focuser in place, approximately 6” of back focus is available to accommodate imaging equipment.

Figure 4 Optec TCF-S3i Focuser

For those imagers requiring even more available back focus, AG Optical Systems offers the FLI Atlas digital focuser as an option. The FLI Atlas focuser provides robust, precise performance in a low-profile package. Approximately 8.5” of back focus is available when a FLI Atlas is used with an iDK astrograph.

Figure 5 FLI Atlas Focuser

Tube Assembly

The tube used for our iDK astrographs is engineered to provide a high level of thermal and mechanical stability. Carbon fiber truss tubes are used in our iDK scopes to ensure that focus stability is maintained over a wide range of temperatures.

AGO has also designed the tube assembly to allow the user to collimate both the primary and secondary mirrors while not affecting the critical spacing between the secondary mirror and the corrector element. Users can completely disassemble the OTA when the time comes to clean or recoat the optics. Through innovative design and precise execution of the tube mechanics, the secondary to corrector element spacing will be precisely repeated when the user reassembles the scope.

All of the aluminum parts within the tube assembly are precision machined from 6061 aluminum and are anodized to provide a durable, wear resistant finish. Stainless steel fasteners are used exclusively to prevent corrosion.

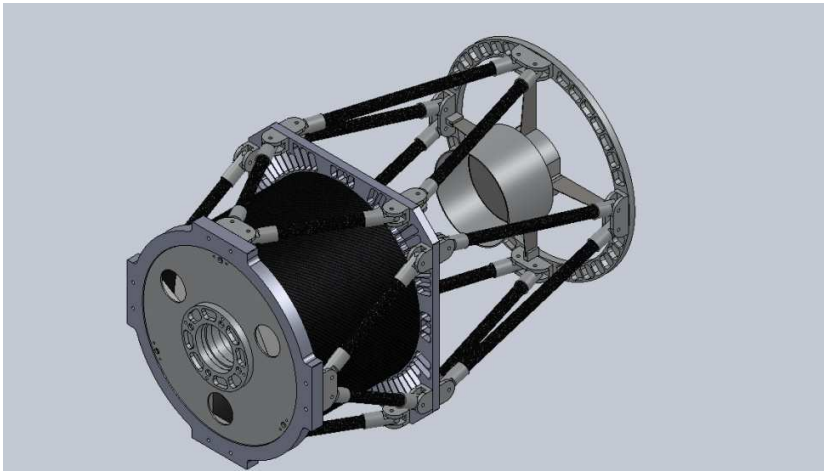

Figure 6 Solidworks CAD model of AG Optical 12.5" iDK Astrograph

Three 12 vDC fans are located behind the primary mirror to help the primary rapidly achieve and maintain thermal equalibrium with the ambient air. The speed of these fans can be adjusted as circumstances dictate.

Thermal Control

AGO includes cooling fans with manual speed control as standard on all of its iDK telescopes to help speed the cooling of the primary mirror. For AGO customers who desire more control of the cooling fan system and would like the option of adding heaters in strategic locations where dew has a tendency to form (such as the secondary mirror) AGO is proud to offer the AGO Thermal Control System.

The AGO Thermal Control Systems allows users to control a thermal control system comprised of fans and primary and secondary mirror anti-dew heaters using a PC-based software application. The application can be controlled remotely and allows a user to configure a range of settings that determine when cooling fans and mirror heaters are active. Once these settings are defined, cooling fans and heaters will be triggered automatically based on the temperature of the system and on ambient temperature.

iDK Specifications and List Prices

Model	**iDK12.5**	**iDK17**	**iDK20**
Aperture	12.5"	17"	20"
Focal ratio	6.7	6.7	6.7
Focal length	83.5"	114"	134"
Back focus*	11"	11"	11"
OTA type	Carbon Fiber Truss	Carbon Fiber Truss	Carbon Fiber Truss
Primary and secondary mirrors	Supremax 33 low-expansion glass		
Fans (blowing	3 x 60mm fans	3 x 80 mm fans	4 x 80 mm fans

air into OTA)			
Secondary obstruction	6.7"	8.2"	9"
Focuser (included)	Optec TCF-S3i digital focuser (standard) Optional FLI Atlas digital focuser		
Corrector	85mm two element, broadband AR coated	100mm two element broadband AR coated	
Mirror Coatings	Enhanced Aluminum		
Baffling	primary and secondary carbon fiber composite baffles, baffled for 16803 size chip		
Dovetail	Losmandy "D", CNC machine 6061 aluminum dovetail included		
Tube length	29"	40"	45"
Tube weight with dovetail & focuser	approx. 47 lbs	approx. 93 lbs	approx. 135 lbs
Price	**$10,695**	**$20,595**	**$29,995**
	Accessories		
FLI Atlas upgrade	**$925**	**$925**	**$925**
AGO Thermal Control System	**$975**	**$975**	**$975**
Shroud	**$125**	**$140**	**$165**

Piggyback Dovetail Plate	**$225**	**$265**	**$305**
Delivery	Approx. 3-4 months		
Shipping	contact AGO		

*Back focus as measure from the back plate to the focal plane. Available back focus with the Optec TCF-S3i is approximately 6”. Available back focus with the FLI Atlas is approximately 8.5”.

AGO Newtonian Astrographs

AGO Newtonian astrographs are a photo junkie's idea of Nirvana. By combining large aperture, fast focal ratio, corrected optics in a lightweight, stiff, and thermally stable carbon fiber tube AGO has created an instrument with a singular purpose: to devour photons and precisely focus them on your CCD camera's chip.

Figure 7 M81/82 Image by Scott Johnson, AGO 12.5" Newtonian Astrograph

AGO Newtonian astrographs offer the best value in the high-end Newtonian astrograph market. On a feature by feature comparison, there is no comparison: AG Optical Systems is light years ahead!

- High quality primary and secondary optics with enhanced aluminum coatings
- Thick wall carbon fiber sandwich honeycomb core tube for focus stability, flocked interior for stray light suppression
- AGO Wynne corrector with generous 3.1" of back focus
- Heavy-duty focuser reinforcement rings to carry heavy camera loads
- Best in class FLI Atlas focuser is standard

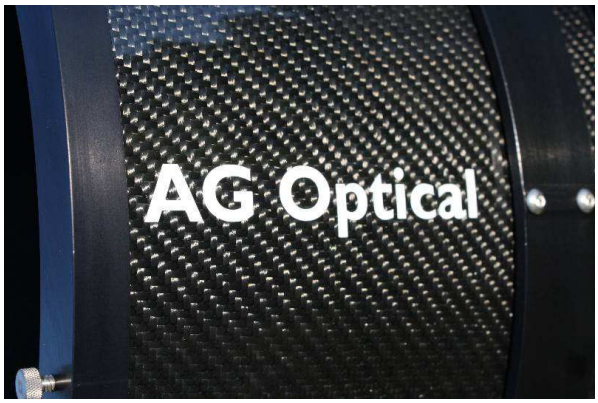

Figure 8 Carbon Fiber Tube

- Multipoint primary mirror flotation cell with heavy duty locking screws for collimation stability
- Integrated dew shield
- Double vane spider assembly for outstanding stiffness and support of secondary mirror
- All stainless steel fasteners
- High quality prepreg carbon fiber materials cured at elevated temperature using vacuum bag techniques

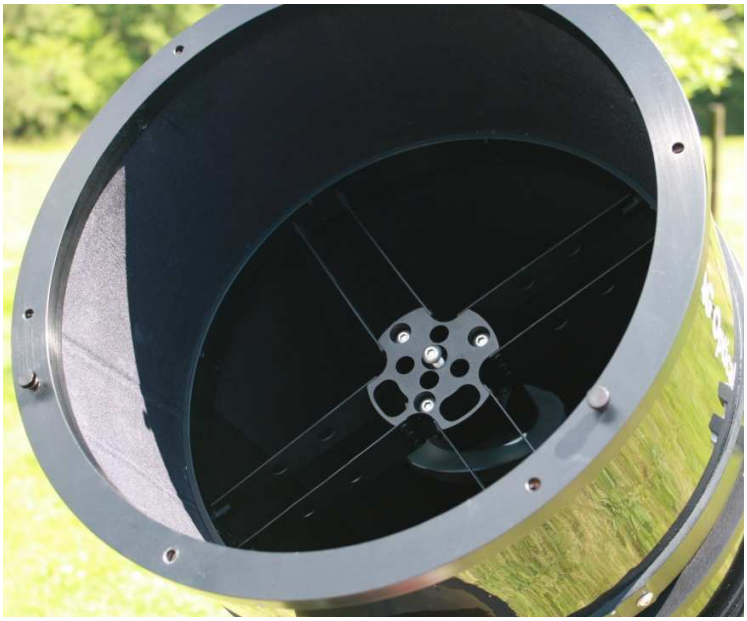

Figure 9 Double Vane Spider Assembly

- Three, speed adjustable cooling fans
- CNC machined 6061 components, black anodized for a dark, durable finish
- 100% Made-in-the-USA with outstanding customer support

Optics

AGO Newtonian astrographs have low expansion F3.8 optics coated with high reflectivity aluminum to maximize light throughput and contrast. Each primary mirror comes with a CATSEYE™ "Hotspot" center mark to aid collimation.

Figure 10 Lagoon Nebula Narrowband Image by Dave Lane, AG Optical 12.5" Newtonian Astrograph

Wynne Corrector

Off-axis aberrations are corrected through the use of an AGO-designed, 100% made-in-the-USA 3.2" Wynne corrector providing

pinpoint stars over a 50mm diameter field of view. The Wynne corrector provides generous 78.5 mm of back focus accommodating most CCD camera/filter wheel/off axis guider combinations.

Focuser

AGO has selected the best in class FLI Atlas digital focuser as standard equipment for our Newtonian astrograph line. This focuser is capable of carrying heavy camera loads and is extremely smooth and robust. Its digital control system allows automatic focusing of stars and perfectly complements an AGO Newtonian astrograph.

Optical Tube Assembly

Stiffness and *thermal stability* are primary requirements of the design behind the tube assemblies used for AGO's Newtonian astrographs. A thick wall carbon fiber sandwich core tube is the backbone of each tube assembly creating a very stiff yet lightweight, thermally stable structure to support the optical and mechanical components of the telescope.

A pair of 6061 aluminum rings support the base of the focuser assembly to ensure a high level of stiffness is maintained at the critical interface between the focuser and the tube.

Figure 11 AG Optical 12.5" Newtonian Astrograph with Dust Cover and Focuser Reinforcement Rings

Tube Rings

AGO Newtonian Astrograph tube rings are lightweight, stiff, CNC machined 6061 aluminum rings. They can be paired with an AGO dovetail plate to ensure a rigid connection to your mount. AGO dovetail plates are Losmandy "D" compatibe. Each flat on the tube rings has two 1/4-20 holes spaced 3.5" apart. The tube rings can be directly mounted to the Paramount ME Versaplate.

Figure 12 AG Optical 12.5" Newtonian Astrograph with tube rings

Thermal Control

AGO includes cooling fans with a manual speed controller as standard on all of its Newtonian astrographs to help speed the cooling of the primary mirror.

Model Specifications and List Prices

Model	**N10a**	**N12.5a**
Aperture	10"	12.5"
Focal ratio	3.8	3.8
Focal length	38"	47.5"
Optics	Supremax 33 full face primary mirror, center marked with Catseye Hotspot	
Secondary size (ma)	4"	4.5"
Focuser	FLI Atlas digital focuser	

Corrector	3.2" Wynne with 78.5 mm back focus, several camera adapters available	
Coatings	High reflectivity aluminum	
Tube Rings	hinged, 6061 anodized, predrilled to fit Paramount ME Versaplate	
Tube outer diameter	14"	16"
Tube length	34"	42"
Tube weight	~ 28 lbs	~45 lbs
Price (includes OTA, FLI Atlas, Wynne corrector	**$8,095**	**$10,995**
	Accessories	
Tube Rings	**$575**	**$675**
Wynne to CCD Adapter	**$225**	**$225**
16" Dovetail Plate	**$135**	**$135**
20" Dovetail Plate	**$165**	**$165**
Delivery	Approx. 3-4 months	
Shipping	contact AGO	

Terms and Conditions

How to Order

AG Optical requires a 50% deposit to place an order for a Newtonian or iDK astrograph. The balance due on the order is required prior to shipment of the product to the customer. Personal checks must clear before AG Optical ships any product.

Dovetail plates, adapters, and rings sold separately from a telescope do not require a deposit.

Availability

Typical delivery times range from 3 to 4 months for Newtonian and iDK astrographs. AG Optical Systems will make every effort to deliver telescopes in a timely manner but cannot guarantee a specific delivery date.

Order Cancellation

Canceled orders are subject to a 3% cancellation fee to be withheld from the deposit. Deposits will be returned within 30 days of the date AG Optical Systems was notified of the cancellation.

Warranty

AG Optical Systems warrants the products it manufactures against defects in materials and workmanship for a period of two years for the original purchaser of the item. AG Optical Systems at its sole discretion will determine if the product has defective materials and/or workmanship. The customer will be responsible for paying all shipping costs associated with the return of the item and must contact AG Optical Systems prior to returning the item. If AG Optical Systems determines the item to be defective in materials and/or workmanship, AG Optical Systems will reimburse the customer's shipping costs and pay for shipping to return the item to the customer.

The terms of this warranty are void if the product is used for a purpose for which it was not designed (to include solar observations) or is subject to abuse beyond normal use.

Items not manufactured by AG Optical Systems are covered by the terms of the original manufacturer.

Other

AG Optical Systems assumes no responsibility for injuries or other liabilities caused from the use or misuse of AG Optical Systems products. AG Optical Systems reserves the right to change all specifications and prices without prior notice.

Figure 13 Image by Dean Schwartzenberg wih AG Optical 12.5" Newtonian Astrograph

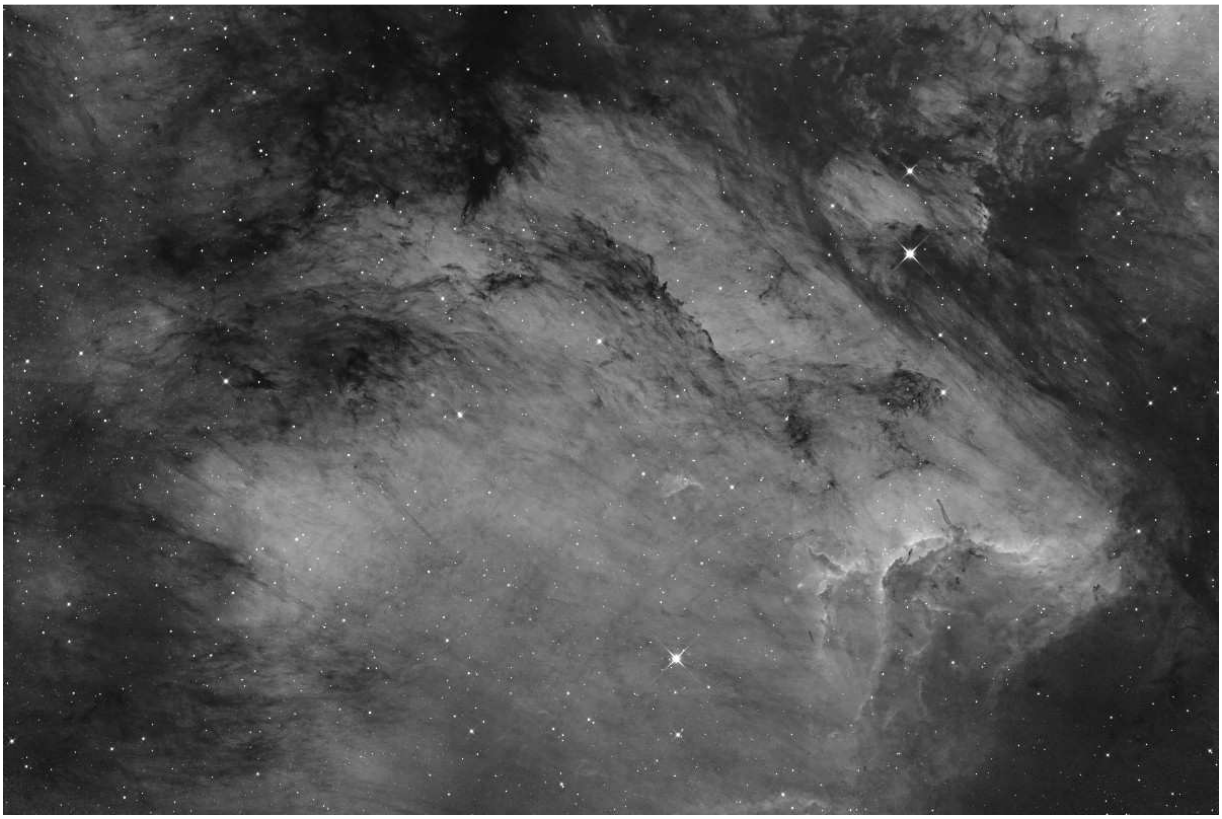

Figure 14 Pelican Nebula in Ha by Scott Johnson, AG Optical 12.5" Newtonian Astrograph